# SOLIDGABION®

**The Smart Solution To Soil Erosion**

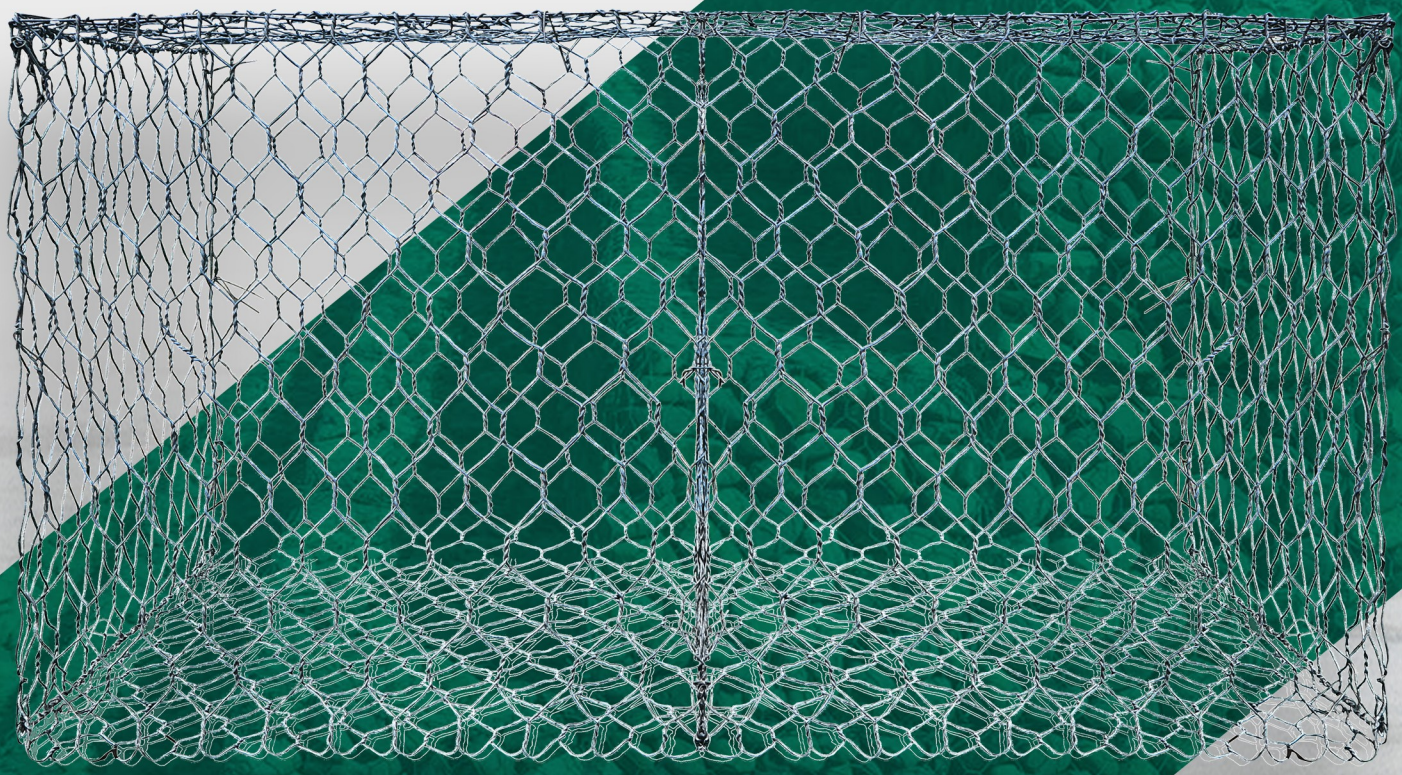

www.solid.ph

SOLID.PH

SOLIDGABION®
The Smart Solution To Soil Erosion

# SOLID GABION

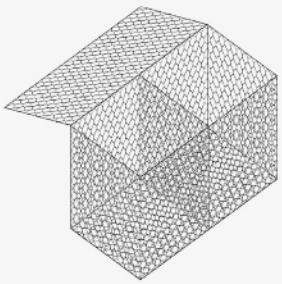

**SG 211**
2 x 1 x 1m

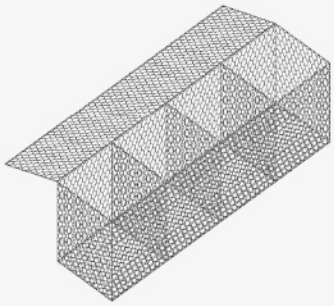

**SG 411**
4 x 1 x 1m

| SPECIFICATIONS | | | | |
|---|---|---|---|---|
| Standard | Non-DPWH Standard | | DPWH Standard (Blue Book) | |
| Body Wire | 2.7mm ø | 2.7mm ø | 3.05mm ø | 2.7mm ø + 1mm PVC |
| Selvedge Wire | 3.4mm ø | 3.4mm ø | 3.80mm ø | 3.4mm ø +1mm PVC |
| Tie Wire | 2.2mm ø | 2.2mm ø | 2.2mm ø | 2.2mm ø + 1mm PVC |
| Mesh Opening | 100 x 120mm | 80 x 100mm | | |
| Zinc Coating | ASTM A 641, Weight of required zinc coating conforms with DPWH Blue Book | | | |
| Tensile Strength | ASTM A 370, Minimum of 350 MPa as per DPWH Blue Book | | | |

| SPECIFICATIONS | |
|---|---|
| Standard | DPWH Standard (Blue Book) |
| Body Wire | 3.05mm ø |
| Selvedge Wire | 3.80mm ø |
| Tie Wire | 2.2mm ø |
| Mesh Opening | 80 x 100mm |
| Zinc Coating | ASTM A 641, Weight of required zinc coating conforms with DPWH Blue Book |
| Tensile Strength | ASTM A 370, Minimum of 350 MPa as per DPWH Blue Book |

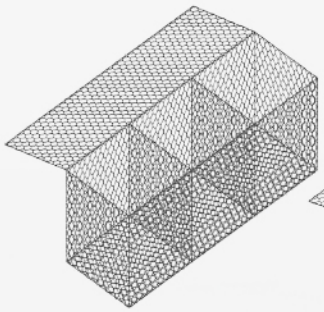

**SG 311**
3 x 1 x 1m

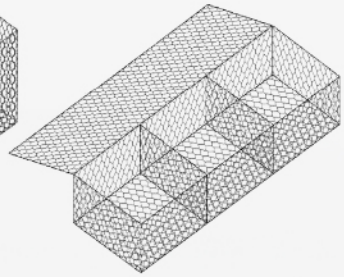

**SG 315**
3 x 1 x 0.5m

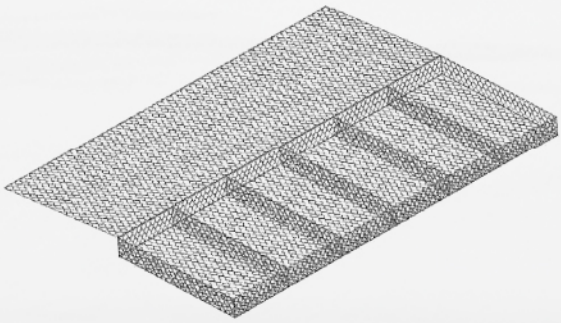

**SG 623**
6 x 2 x 0.3m

| SPECIFICATIONS | | |
|---|---|---|
| Standard | DPWH Standard (Blue Book) | |
| Body Wire | 2.2mm ø | 2.2mm ø + 1mm PVC |
| Selvedge Wire | 2.7mm ø | 2.7mm ø + 1mm PVC |
| Tie Wire | 2.2mm ø | 2.2mm ø + 1mm PVC |
| Mesh Opening | 60 x 80 mm | |
| Zinc Coating | ASTM A 641, Weight of required zinc coating conforms with DPWH Blue Book | |
| Tensile Strength | ASTM A 370, Minimum of 350 MPa as per DPWH Blue Book | |


www.solid.ph | CALL US NOW!

**METRO MANILA**
12/F 1203A West Tower, Tektite Building, Exchange Road
Ortigas Center, Pasig City 1605
**+63 917 525 6000**

**PANGASINAN**
1000 Sta. Barbara - Mangaldan Road
Brgy. Malanay, Sta. Barbara 2419
**+63 917 773 1900**

**ISABELA**
Maharlika Highway Barangay Sinippil
Reina Mercedes, Isabela 3303
**+63 917 162 3000**

**DAVAO**
Purok 26, Caimito, Ma-a Riverside Road
Brgy. Ma-a, Davao City 8000
**+63 917 525 3000**

SOLID.PH

SOLIDGABION®
The Smart Solution To Soil Erosion

# GEOTEXTILE (FILTER CLOTH)

PRODUCT DATA SHEET

| ITEM | UNIT | INDEX | | |
|---|---|---|---|---|
| WEIGHT PER SQUARE METER | g/m² | 150 g/m² | 250 g/m² | 400 g/m² |
| THICKNESS | mm | 1.2 | 1.9 | 2.8 |
| BREAKING STRENGTH | KN/m | 7.5 | 12.5 | 20.5 |
| ELONGATION AT BREAK | % | 40~80 | 40~80 | 40~80 |
| CBR MULLEN BURST STRENGTH | KN | 1.4 | 2.2 | 3.5 |
| TEAR STRENGTH | KN | 0.21 | 0.35 | 0.56 |
| SIEVE SIZE $O_{90}$ | mm | 0.07~0.2 | 0.07~0.2 | 0.07~0.2 |

# GABION TIE WIRE

High Zinc Coating For Gabion Projects

2.2mm zinc coating

2.2mm + 1mm pvc coated 50kgs/roll

*The information contained in this document is a general guide to the use of such products, and is to the best of our knowledge, true and accurate. The values are based on testing conducted by the Quality Assurance and Quality control unit from our factory. Solid Gabion reserves the right to make modifications to its products without notice.*


www.solid.ph | CALL US NOW!

**METRO MANILA**
12/F 1203A West Tower, Tektite Building, Exchange Road
Ortigas Center, Pasig City 1605
**+63 917 525 6000**

**PANGASINAN**
1000 Sta. Barbara - Mangaldan Road
Brgy. Malanay, Sta. Barbara 2419
**+63 917 773 1900**

**ISABELA**
Maharlika Highway Barangay Sinippil
Reina Mercedes, Isabela 3303
**+63 917 162 3000**

**DAVAO**
Purok 26, Caimito, Ma-a Riverside Road
Brgy. Ma-a, Davao City 8000
**+63 917 525 3000**